AQA

Please write clearly in block capitals.

Centre number | | | | | | Candidate number | | | | |

Surname _____

Forename(s) _____

Candidate signature _____

I declare this is my own work.

GCSE
COMPUTER SCIENCE

Paper 1 Computational Thinking and Problem-Solving

Monday 11 May 2020 Morning Time allowed: 1 hour 30 minutes

Materials
There are no additional materials required for this paper.

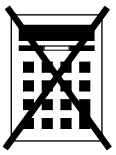

Instructions
- Use black ink or black ball-point pen. Use pencil only for drawing.
- Answer **all** questions.
- You must answer the questions in the spaces provided.
- If you need extra space for your answer(s), use the lined pages at the end of this book. Write the question number against your answer(s).
- Do all rough work in this book. Cross through any work you do not want to be marked.
- Unless the question states otherwise, you are free to answer questions that require a coded solution in whatever format you prefer as long as your meaning is clear and unambiguous.
- You must **not** use a calculator.

Information
The total number of marks available for this paper is 80.

For Examiner's Use	
Question	Mark
1–2	
3	
4	
5	
6–7	
8	
9	
10	
11	
12	
TOTAL	

Advice

For the multiple-choice questions, completely fill in the lozenge alongside the appropriate answer.

CORRECT METHOD  WRONG METHODS 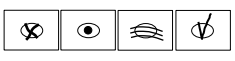

If you want to change your answer you must cross out your original answer as shown. 

If you wish to return to an answer previously crossed out, ring the answer you now wish to select as shown. 

Do not write outside the box

Answer **all** questions.

0 1 . 1 A bitmap image is represented as a grid of pixels.

State what is meant by the term pixel.

[1 mark]

0 1 . 2 State the maximum number of different colours that can be used if a bitmap image has a colour depth of six bits.

[1 mark]

0 1 . 3 What is the minimum file size for an 800 pixel by 1000 pixel bitmap image that uses 20 different colours? You should give your answer in **kilobytes**.

You should show your working.

[3 marks]

Answer _____ kB

Do not write outside the box

0 1 . 4 The algorithm shown in **Figure 1** converts binary data entered as a string by the user into a representation of a black and white image.

The algorithm uses the + operator to concatenate two strings.

Characters in the string are indexed starting at zero. For example `bdata[2]` would access the third character of the string stored in the variable `bdata`

The `MOD` operator calculates the remainder after integer division, for example `17 MOD 5 = 2`

Figure 1

```
bdata ← USERINPUT
image ← ''
FOR i ← 0 TO LEN(bdata) - 1
   IF bdata[i] = '0' THEN
      image ← image + '*'
   ELSE
      image ← image + '/'
   ENDIF
   IF i MOD 3 = 2 THEN
      OUTPUT image
      image ← ''
   ENDIF
ENDFOR
```

Complete the trace table for the algorithm shown in **Figure 1** when the variable `bdata` is given the following value from the user:

`110101`

You may not need to use every row in the table. The algorithm output is not required.

[3 marks]

i	image

Turn over ►

Do not write outside the box

0 2 Describe how the linear search algorithm works.

[3 marks]

11

0 3 . 1 State the name of the logic gate represented by the following truth table.

[1 mark]

Input A	Input B	Output
0	0	0
0	1	0
1	0	0
1	1	1

Logic gate _____

Do not write outside the box

A partially complete logic circuit is shown in **Figure 2** that detects if a computer system has been set up correctly. There are two keyboard input devices, keyboard **A** and keyboard **B**, and either one can be connected to the computer system. However, if they are both connected then the computer system will not work.

Output **P** has the value 1 if either keyboard **A** or keyboard **B**, but not both, is connected to the computer system and 0 otherwise.

Figure 2

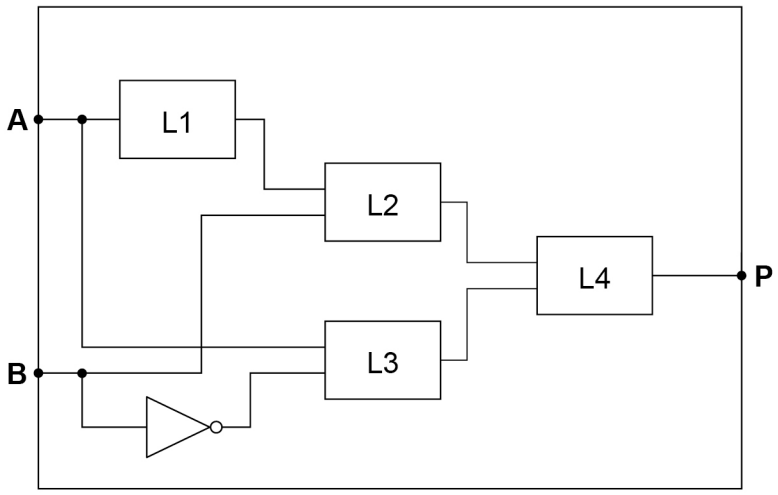

0 3 . 2 State the name of the logic gates that should be placed in the positions indicated by the labels **L1**, **L2**, **L3** and **L4** in **Figure 2**.

[3 marks]

Label	Logic gate
L1	
L2	
L3	
L4	

4

Turn over for the next question

Do not write outside the box

0 4 The algorithm shown in **Figure 3** is used to check if the start of an instruction for a particular assembly language is valid.

The string representation of the assembly language instruction is stored in the variable `instr`

Characters in the string are indexed starting at zero. For example `instr[2]` would access the third character of the string stored in the variable `instr`

Figure 3

```
code ← ''
i ← 0
WHILE instr[i] ≠ ':' AND i < 4
   code ← code + instr[i]
   i ← i + 1
ENDWHILE
valid ← False
IF code = 'ADD' OR code = 'SUB' OR code = 'HALT' THEN
   valid ← True
ENDIF
```

0 4 . 1 Shade **one** lozenge to show the most appropriate data type of the variable `i` in the algorithm in **Figure 3**.

[1 mark]

A Character ⬭

B Integer ⬭

C Real ⬭

D String ⬭

0 4 . 2 State the data type of the variable `valid` in the algorithm in **Figure 3**.

[1 mark]

Do not write outside the box

0 4 . 3 State the final value of the variable `valid` in the algorithm in **Figure 3** for the following different starting values of `instr`

[3 marks]

Value of `instr`	**Final value of** `valid`
`ADD R0, R1`	
`ADD: R0, R1`	
`HALT`	

0 4 . 4 State what an assembly language program must be translated into before it can be executed by a computer.

[1 mark]

0 4 . 5 State **two** reasons why a programmer, who can program in both high-level and low-level languages, would usually choose to develop in a high-level language rather than a low-level language.

[2 marks]

Reason 1

Reason 2

Do not write outside the box

0 4 . 6 Develop an algorithm, using either pseudo-code **or** a flowchart, that:

- initialises a variable called `regValid` to `False`
- sets a variable called `regValid` to `True` if the string contained in the variable `reg` is an uppercase `R` followed by the character representation of a single numeric digit.

Examples:
- if the value of `reg` is `R0` or `R9` then `regValid` should be `True`
- if the value of `reg` is `r6` or `Rh` then `regValid` should be `False`

You may wish to use the subroutine `isDigit(ch)` in your answer. The subroutine `isDigit` returns `True` if the character parameter `ch` is a string representation of a digit and `False` otherwise.

[3 marks]

11

Do not write outside the box

Turn over for the next question

DO NOT WRITE ON THIS PAGE
ANSWER IN THE SPACES PROVIDED

Do not write outside the box

0 5 The algorithms shown in **Figure 4** and **Figure 5** both have the same purpose.

The operator `LEFTSHIFT` performs a binary shift to the left by the number indicated.

For example, `6 LEFTSHIFT 1` will left shift the number `6` by one place, which has the effect of multiplying the number `6` by two giving a result of 12

Figure 4

```
result ← number LEFTSHIFT 2
result ← result - number
```

Figure 5

```
result ← 0
FOR x ← 1 TO 3
   result ← result + number
ENDFOR
```

0 5 . 1 Complete the trace table for the algorithm shown in **Figure 4** when the initial value of `number` is 4

You may not need to use all rows of the trace table.

[2 marks]

result

Do not write outside the box

0 5 . 2 Complete the trace table for the algorithm shown in **Figure 5** when the initial value of `number` is 4

You may not need to use all rows of the trace table.

[2 marks]

x	result

0 5 . 3 The algorithms in **Figure 4** and **Figure 5** have the same purpose.

State this purpose.

[1 mark]

0 5 . 4 Explain why the algorithm shown in **Figure 4** can be considered to be a more efficient algorithm than the algorithm shown in **Figure 5**.

[1 mark]

6

Turn over for the next question

Do not write outside the box

0 6 Show the steps involved, for either the bubble sort algorithm **or** the merge sort algorithm, to sort the array shown in **Figure 6** so the result is `[1, 4, 5, 8]`

Figure 6

`[8, 4, 1, 5]`

Circle the algorithm you have chosen:

Bubble sort Merge sort

[4 marks]

Steps:

Do not write outside the box

Turn over for the next question

DO NOT WRITE ON THIS PAGE
ANSWER IN THE SPACES PROVIDED

Do not write outside the box

0 7 . 1 Four subroutines are shown in **Figure 7**.

Figure 7

```
SUBROUTINE main(k)
   OUTPUT k
   WHILE k > 1
      IF isEven(k) = True THEN
         k ← decrease(k)
      ELSE
         k ← increase(k)
      ENDIF
      OUTPUT k
   ENDWHILE
ENDSUBROUTINE

SUBROUTINE decrease(n)
   result ← n DIV 2
   RETURN result
ENDSUBROUTINE

SUBROUTINE increase(n)
   result ← (3 * n) + 1
   RETURN result
ENDSUBROUTINE

SUBROUTINE isEven(n)
   IF (n MOD 2) = 0 THEN
      RETURN True
   ELSE
      RETURN False
   ENDIF
ENDSUBROUTINE
```

Do not write outside the box

Complete the table showing **all** of the outputs from the subroutine call `main(3)`

The first output has already been written in the trace table. You may not need to use all rows of the table.

[4 marks]

Output
3

0 7 . 2 Describe how the developer has used the structured approach to programming in **Figure 7**.

[2 marks]

10

Turn over ►

Do not write outside the box

0 8 The subroutine `CODE_TO_CHAR` can be used to convert a character code into the corresponding Unicode character. For example:

`CODE_TO_CHAR(97)` will return the character `'a'`
`CODE_TO_CHAR(65)` will return the character `'A'`

The subroutine `CHAR_TO_CODE` can be used to convert a Unicode character into the corresponding character code. For example:

`CHAR_TO_CODE('a')` will return the integer `97`
`CHAR_TO_CODE('A')` will return the integer `65`

0 8 . 1 Shade **one** lozenge to show what value would be returned from the subroutine call `CODE_TO_CHAR(100)`

[1 mark]

A `'c'` ⬭

B `'d'` ⬭

C `'e'` ⬭

D `'f'` ⬭

0 8 . 2 State the value that will be returned from the subroutine call:

```
CODE_TO_CHAR(CHAR_TO_CODE('E') + 2)
```

[1 mark]

Value returned _____

Do not write outside the box

0 8 . 3 Write a subroutine `TO_LOWER`, using either pseudo-code **or** a flowchart, that takes an upper case character as a parameter and returns the corresponding lower case character.

For example, if the subroutine `TO_LOWER` is passed the character `'A'` as a parameter, the subroutine should return the character `'a'`.

You should make use of the subroutines `CODE_TO_CHAR` and `CHAR_TO_CODE` in your answer.

You can assume that the parameter passed to the subroutine will be in upper case.

[5 marks]

7

Turn over ►

Do not write outside the box

0 9 A developer needs to store data about thousands of songs in a program. She needs to be able to hold information on every song's title, singer and year of release.

Explain how the developer could use a combination of an array and records to store this information.

In your answer you should refer to the data types that would be used by the developer.

[4 marks]

4

Do not write outside the box

Turn over for the next question

DO NOT WRITE ON THIS PAGE
ANSWER IN THE SPACES PROVIDED

Do not write outside the box

1 0 An application allows only two users to log in. Their usernames are stated in **Table 1** along with their passwords.

Table 1

username	password
gower	9Fdg3
tuff	888rG

Develop an algorithm, using either pseudo-code **or** a flowchart, that authenticates the user. The algorithm should:

- get the user to enter their username and password
- check that the combination of username and password is correct and, if so, output the string `'access granted'`
- get the user to keep re-entering their username and password until the combination is correct.

[6 marks]

Do not write outside the box

6

Do not write outside the box

1 1 Develop an algorithm, using either pseudo-code **or** a flowchart, that helps an ice cream seller in a hot country calculate how many ice creams they are likely to sell on a particular day. Your algorithm should:

- get the user to enter whether it is the weekend or a weekday
- get the user to enter the temperature forecast in degrees Celsius (they should enter a number between 20 and 45 inclusive; if the number falls outside of this range then they should be made to re-enter another number until they enter a valid temperature)
- calculate the number of ice creams that are likely to be sold using the following information:
  - 100 ice creams are likely to be sold if the temperature is between 20 and 30 degrees inclusive,
  - 150 ice creams are likely to be sold if the temperature is between 31 and 38 degrees inclusive,
  - and 120 ice creams are likely to be sold if the temperature is higher than 38 degrees
- double the estimate if it is a weekend
- output the estimated number of ice creams that are likely to be sold.

[9 marks]

Do not write outside the box

9

Turn over ►

Do not write outside the box

1 2 A developer has written a set of subroutines to control an array of lights. The lights are indexed from zero. They are controlled using the subroutines in **Table 2**.

Table 2

Subroutine	Explanation
`SWITCH(n)`	If the light at index `n` is on it is set to off. If the light at index `n` is off it is set to on.
`NEIGHBOUR(n)`	If the light at index `(n+1)` is on, the light at index `n` is also set to on. If the light at index `(n+1)` is off, the light at index `n` is also set to off.
`RANGEOFF(m, n)`	All the lights between index `m` and index `n` (but **not** including `m` and `n`) are set to off.

Array indices are shown above the array of lights.

For example, if the starting array of the lights is

0	1	2	3
off	on	off	on

Then after the subroutine call `SWITCH(2)` the array of lights will become

0	1	2	3
off	on	on	on

And then after the subroutine call `NEIGHBOUR(0)` the array of lights will become

0	1	2	3
on	on	on	on

Finally, after the subroutine call `RANGEOFF(0, 3)` the array of lights will become

0	1	2	3
on	off	off	on

Do not write outside the box

1 2 . 1 If the starting array of lights is

0	1	2	3	4	5	6
on	off	off	on	off	off	on

What will the array of lights become after the following algorithm has been followed?

```
a ← 2
SWITCH(a)
SWITCH(a + 1)
NEIGHBOUR(a - 2)
```

Write your final answer in the following array

[3 marks]

0	1	2	3	4	5	6

1 2 . 2 If the starting array of lights is

0	1	2	3	4	5	6
off	off	on	off	on	on	on

What will the array of lights become after the following algorithm has been followed?

```
FOR a ← 0 TO 2
   SWITCH(a)
ENDFOR
b ← 8
RANGEOFF((b / 2), 6)
NEIGHBOUR(b - 4)
```

Write your final answer in the following array

[3 marks]

0	1	2	3	4	5	6

Do not write outside the box

1 2 . 3 If the starting array of lights is

0	1	2	3	4	5	6
off	on	off	on	off	on	off

What will the array of lights become after the following algorithm has been followed?

```
a ← 0
WHILE a < 3
   SWITCH(a)
   b ← 5
   WHILE b ≤ 6
      SWITCH(b)
      b ← b + 1
   ENDWHILE
   a ← a + 1
ENDWHILE
```

Write your final answer in the following array

[3 marks]

0	1	2	3	4	5	6

Do not write outside the box

1 2 . 4 If the starting array of lights is

0	1	2	3	4	5	6
on	on	on	on	on	on	on

Write an algorithm, using **exactly three** subroutine calls, that means the final array of lights will be

0	1	2	3	4	5	6
off	off	off	off	off	off	off

You must use each of the subroutines `SWITCH`, `NEIGHBOUR` and `RANGEOFF` **exactly once** in your answer. If you do not do this you may still be able to get some marks.

[3 marks]

12

END OF QUESTIONS

Do not write outside the box

There are no questions printed on this page

DO NOT WRITE ON THIS PAGE
ANSWER IN THE SPACES PROVIDED

Do not write outside the box

Question number	**Additional page, if required.** **Write the question numbers in the left-hand margin.**

Do not write outside the box

Question number	**Additional page, if required.** **Write the question numbers in the left-hand margin.**

Do not write outside the box

Question number	**Additional page, if required.** **Write the question numbers in the left-hand margin.**

Do not write outside the box

There are no questions printed on this page

DO NOT WRITE ON THIS PAGE
ANSWER IN THE SPACES PROVIDED

Copyright information

For confidentiality purposes, all acknowledgements of third-party copyright material are published in a separate booklet. This booklet is published after each live examination series and is available for free download from www.aqa.org.uk.

Permission to reproduce all copyright material has been applied for. In some cases, efforts to contact copyright-holders may have been unsuccessful and AQA will be happy to rectify any omissions of acknowledgements. If you have any queries please contact the Copyright Team.

Copyright © 2020 AQA and its licensors. All rights reserved.